F8Q632,F9Q782,K7J701/ABS/CHENOR/SANSUCH
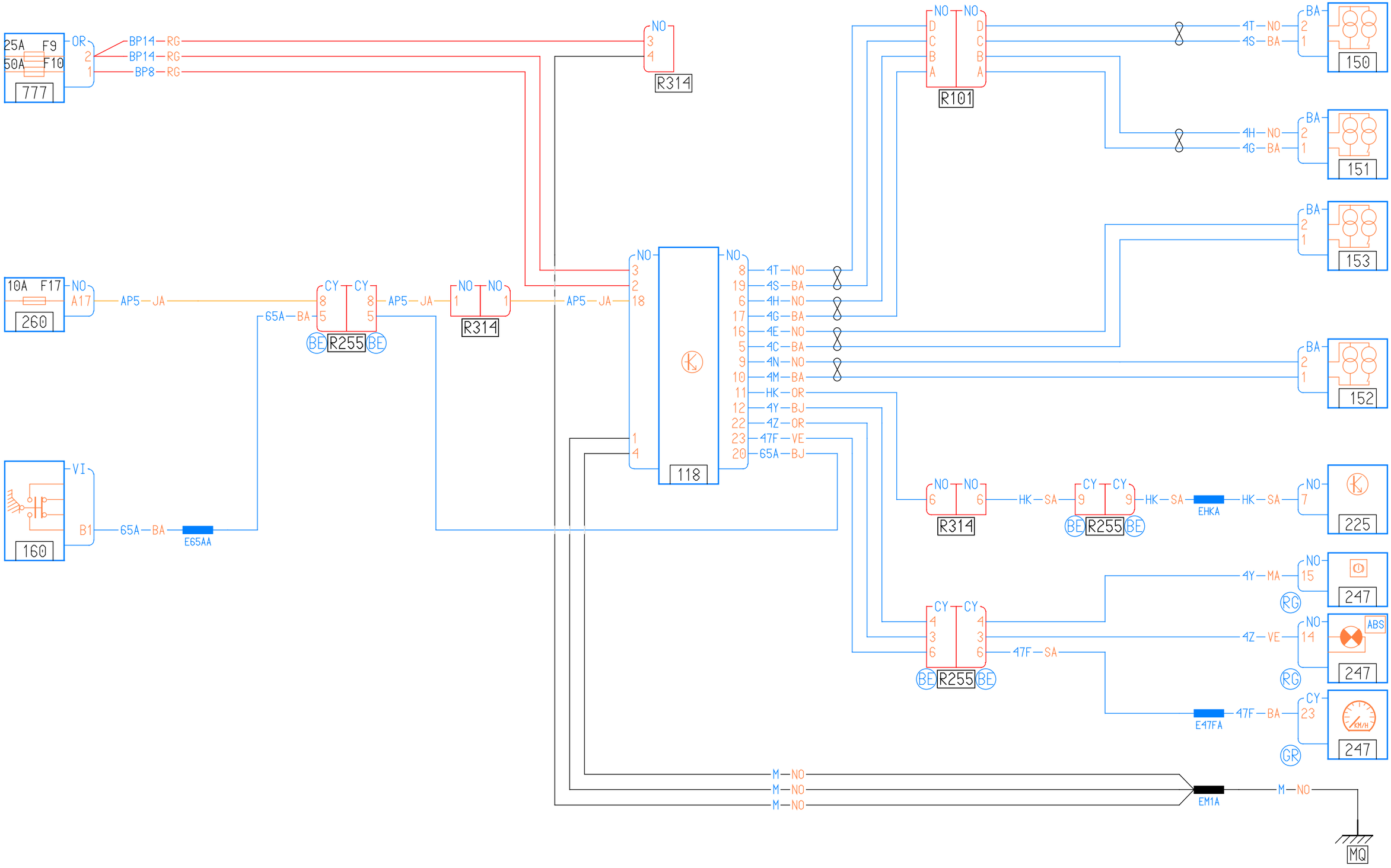
X76
03