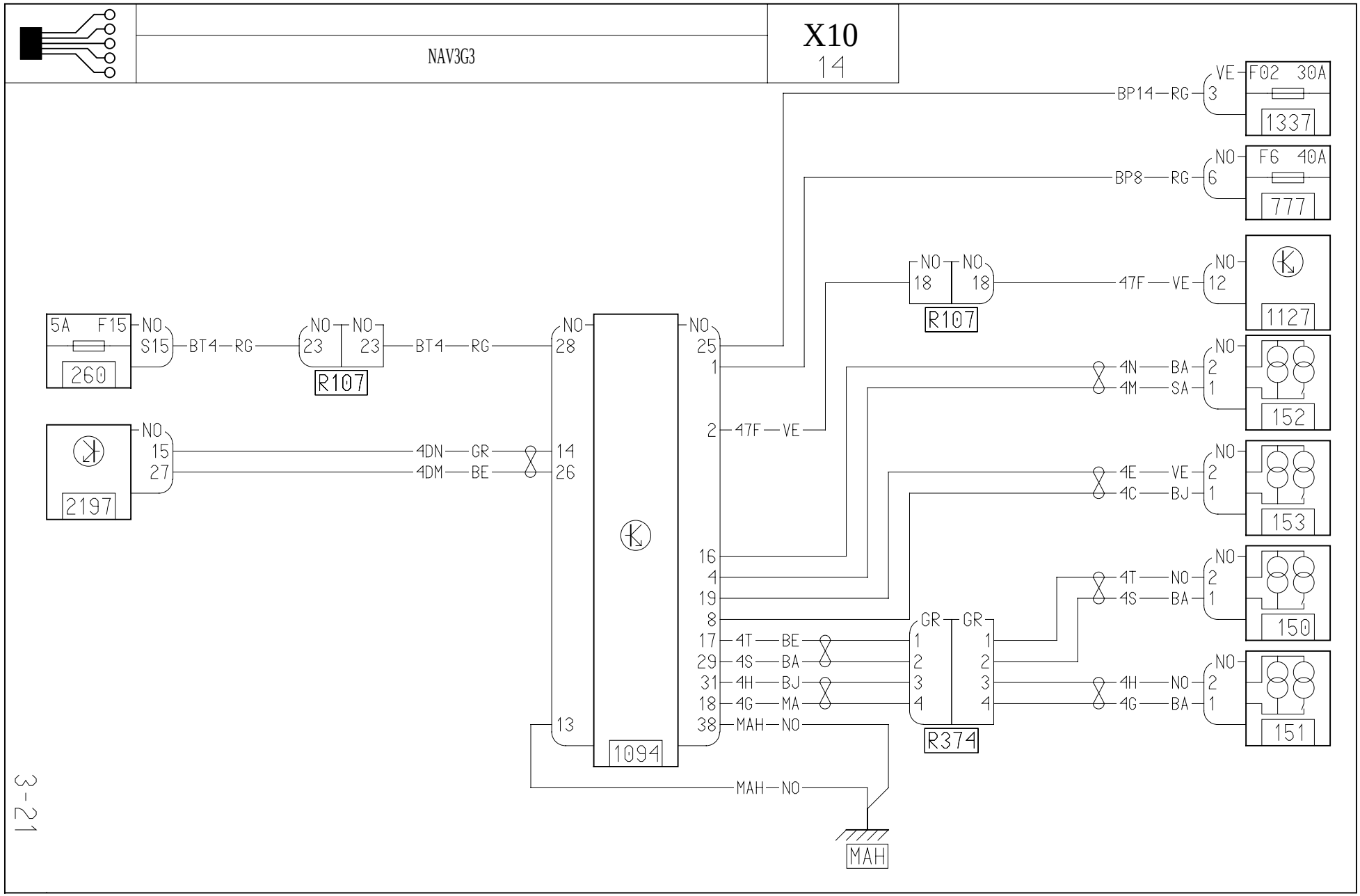
NAV3G3
X10
14
5A F15
260
NO
S15
BT4 RG
NO 23
NO 23
R107
BT4 RG
NO 28
NO 25
1
2 47F VE
16
4
19
8
17 4T BE
29 4S BA
31 4H BJ
18 4G MA
38 MAH NO
13
1094
MAH NO
MAH
2197
NO 15
27
4DN GR
4DM BE
14
26
BP14 RG
VE 3
F02 30A
1337
BP8 RG
NO 6
F6 40A
777
NO 18
NO 18
R107
47F VE
NO 12
1127
4N BA
4M SA
NO 2
1
152
4E VE
4C BJ
NO 2
1
153
4T NO
4S BA
NO 2
1
150
4H NO
4G BA
NO 2
1
151
GR 1
GR 2
GR 3
GR 4
R374